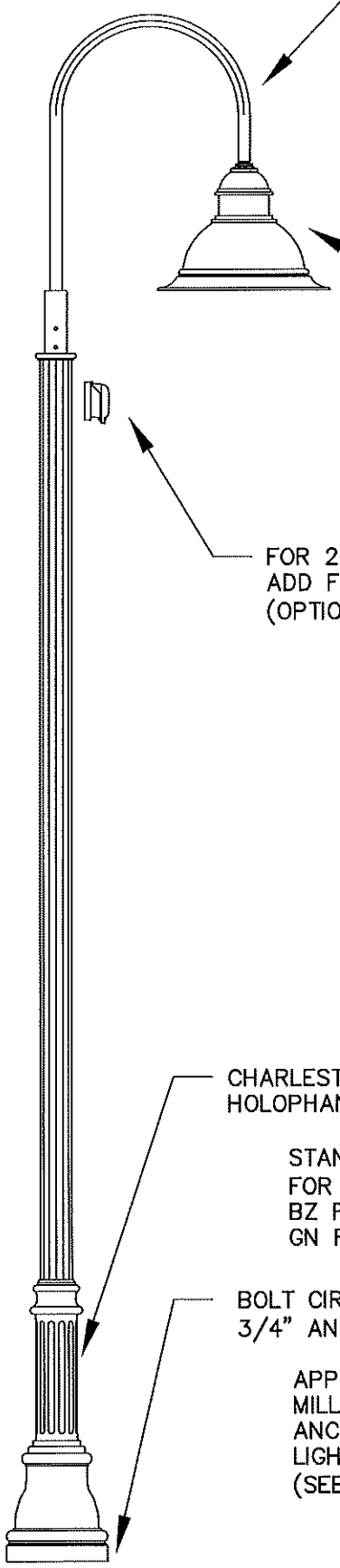

BISHOP'S CROOK STYLE ARM
HOLOPHANE 1BC90R15F-BK-RFD295470

STANDARD COLOR IS BLACK ("BK").
FOR COLOR, CHANGE "BK" TO:
DB FOR BRONZE
RAL6005 FOR DARK GREEN

DOMUS PENDANT STYLE LUMINAIRE
LUMEC DMS50-55W32LED3K-T-ACDR-LE3F-VOLT
-DMG-BKTX

STANDARD COLOR IS BLACK ("BKTX").
FOR COLOR, CHANGE "BKTK" TO:
BRTX FOR BRONZE
GY3TX FOR MEDIUM GRAY
GN8TX FOR DARK FOREST GREEN

FOR 20A WR-RATED GFI RECEPTACLE
ADD FGIUS-SXXH
(OPTIONAL - SEE PLAN)

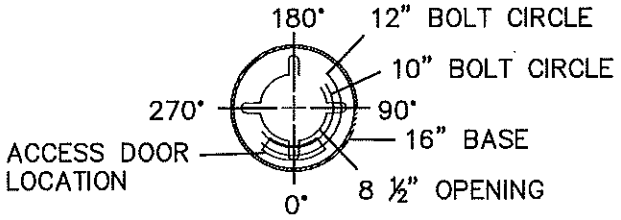


ANCHORAGE
DETAIL

CHARLESTON FLUTED POLE
HOLOPHANE CH-A-16-F5J-16-P09-ABG-BK

STANDARD COLOR IS BLACK ("BK").
FOR COLOR, CHANGE "BK" TO:
BZ FOR BRONZE
GN FOR GREEN

BOLT CIRCLE 10" TO 12"
3/4" ANCHOR BOLTS

APPROVED LIGHT BASE FOUNDATION:
MILLERBERND # 490A111 SCREW-IN
ANCHOR BASE, OR MnDOT CONCRETE
LIGHT FOUNDATION DESIGN E MOD
(SEE PLAN FOR DETAIL)

COORDINATE COLORS BETWEEN POLE
AND LUMINAIRE MANUFACTURER.
SPECIFY RAL COLOR AS NECESSARY

| | | |
|---|---|---|
| CITY OF EDINA ENGINEERING & PUBLIC WORKS DEPTS. | PENDANT LUMINAIRE<br>APPROVED: CITY ENGINEER | REVISED: 3-19<br>STANDARD PLATE<br>625 |

PHILIPS
LUMEC

# Urban

## Domus

DMS50

Project:

Location:

Cat.No:

Type:

Lamps: Qty:

Notes:

The Domus 50 is one of the most versatile luminaires offered by Philips Lumec. This classic shape was one of the first in a line of pioneering Philips Lumec designs. Domus offers a subtly refined design that balances shape, dimension and proportion.

## Ordering guide: Luminaire

Example: DMS50-90W80LED4K-T-ACDR-LE3F-120-DMG-SMB-RCD-PH8-BKTX

| Series | LED module | | Lamp type | Globe material | Optical system | Voltage | Driver options |
|---|---|---|---|---|---|---|---|
| **DMS50**<br>Domus | *4000K*<br>**35W32LED4K**<br>**55W32LED4K**<br>**55W48LED4K**<br>**70W64LED4K**<br>**72W32LED4K**<br>**80W48LED4K**<br>**90W80LED4K**<br>**108W48LED4K**<br>**110W64LED4K**<br>**135W80LED4K**<br>**145W64LED4K**<br>**180W80LED4K** | *3000K*<br>**35W32LED3K**<br>**55W32LED3K**<br>**55W48LED3K**<br>**70W64LED3K**<br>**72W32LED3K**<br>**80W48LED3K**<br>**90W80LED3K**<br>**108W48LED3K**<br>**110W64LED3K**<br>**135W80LED3K**<br>**145W64LED3K**<br>**180W80LED3K** | **T** | **ACDR** Acrylic globe | *Globe*<br>**LE2A**[6] Type II (ASYM) with globe<br>**LE3A**[6] Type III (ASYM) with globe<br>**LE4A**[6] Type IV (ASYM) with globe<br>*Sag lens*<br>**LE2S** Type II (ASYM) Sag glass lens<br>**LE3S** Type III (ASYM) Sag glass lens<br>**LE4S** Type IV (ASYM) Sag glass lens<br>**LE5S**[1] Type V (SYMM) Sag glass lens<br>*Flat lens*<br>**LE2F** Type II (ASYM) Flat glass lens<br>**LE3F** Type III (ASYM) Flat glass lens<br>**LE4F** Type IV (ASYM) Flat glass lens<br>**LE5F**[1] Type V (SYMM) Flat glass lens | **120** 120V<br>**208** 208V<br>**240** 240V<br>**277** 277V<br>**347** 347V<br>**480** 480V | **AST**[3] Pre-set, progressive start-up<br>**CLO**[3] Pre-set, manage lumen depreciation<br>**DALI**[3] Pre-set, compatible with the DALI control system<br>**OTL**[3] Pre-set to signal end of life of the lamp<br>**DMG** 0-10V<br>**CDMGP**[3] Dimming level set by user<br>**CDMGE25**[3] 8 hrs. 25% reduction<br>**CDMGE50**[3] 8 hrs. 50% reduction<br>**CDMGE75**[3] 8 hrs. 75% reduction<br>**CDMGM25**[3] 6 hrs. 25% reduction<br>**CDMGM50**[3] 6 hrs. 50% reduction<br>**CDMGM75**[3] 6 hrs. 75% reduction<br>**CDMGS25**[3] 4 hrs. 25% reduction<br>**CDMGS50**[3] 4 hrs. 50% reduction<br>**CDMGS75**[3] 4 hrs. 75% reduction |

### Ordering guide (continued)

| Adaptors | Luminaire options | Poles & Brackets | Finish |
|---|---|---|---|
| **MA1** 1 1/4" NPT threaded hole adaptor<br>**MA2** 1 1/2" NPT threaded hole adaptor<br>**SMA**[7] Decorative retro side-mounted cast-aluminum, accepts tubes from 1 5/8" to 2 3/8"<br>**SMB** Decorative contemporary side-mounted cast-aluminum, accepts tubes from 1 5/8" to 2 3/8" | **BO** Bridge and Overpass<br>**DE1** Decorative deflector<br>**HS** House side shield<br>**PH7** Photoelectric cell, bottom type<br>**PH8**[2,4] Photoelectric cell<br>**PH9**[2,4] Shorting cap<br>**PHXL**[2,4] Photoelectric cell, extended life<br>**RC**[2,5] Receptacle 3 pins<br>**RCD**[2,5] Receptacle 5 pins<br>**RCD7**[2,5] Receptacle 7 pins<br>**SP2** Surge protector | Consult Philips.com/ luminaires for details and the complete line of Philips poles and brackets. | **BE2TX** Textured midnight blue<br>**BE6TX** Textured ocean blue<br>**BE8TX** Textured royal blue<br>**BG2TX** Textured Sandstone<br>**BKTX** Textured black<br>**BRTX** Textured bronze<br>**GN4TX** Textured blue green<br>**GN6TX** Textured forest green<br>**GN8TX** Textured Dk forest green<br>**GNTX** Textured green<br>**GR** Gray sandtex<br>**GY3TX** Textured medium grey<br>**NP** Natural aluminum<br>**RD2TX** Textured burgundy<br>**RD4TX** Textured scarlet<br>**TG** Hammertone gold<br>**WHTX** Textured white |

**Footnotes**

1. Not available with **HS** option.
2. **SMA** or **SMB** adaptors is required for this option.
3. Not available 347-480 volt.
4. Luminaire option **RC**, **RCD** or **RCD7** is required with this options.
5. Use of photoelectric cell or shorting cap is required to ensure proper illumination.
6. Globe Material **ACDR** is required with this optical system.
7. Only 3 pin receptacle **RC** is available with **SMA** adaptor.

# DMS50 Domus LED pendant

## Urban luminaire

### Dimensions

**EPA**: 1.35 ft² max.
**Weight**: 42 lbs (19.1kg) max.

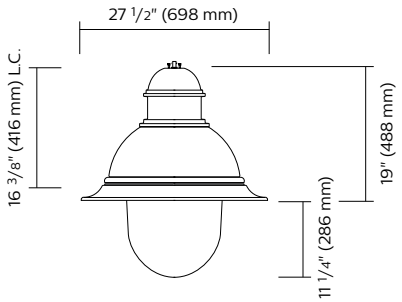


**DMS50 - A optics**
Long drop globe

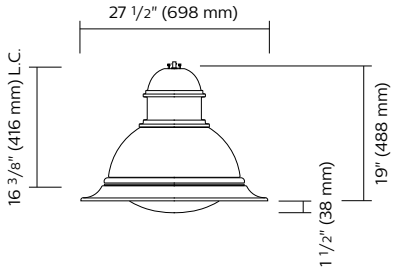


**DMS50 - S optics**
Sag lens

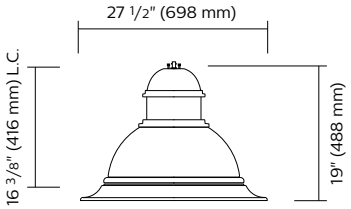


**DMS50 - F optics**
Flat lens

### Predicted Lumen Depreciation Data

Predicted performance derived from LED manufacturer's data and engineering design estimates, based on IESNA LM-80 methodology. Actual experience may vary due to field application conditions.$L_{70}$ is the predicted time when LED performance depreciates to 70% of initial lumen output. Calculated per IESNA TM21-11. Published $L_{70}$ hours limited to 6 times actual LED test hours.

| Ambient Temperature °C | Driver mA | Calculated $L_{70}$ Hours | $L_{70}$ per TM-21 | Lumen Maintenance % at 60,000 hrs |
|---|---|---|---|---|
| 35°C | 700 mA | >100,000 hours | >60,000 hours | >86% |

### LED Wattage and Lumen Values: 4000K Domus luminaire

**Flat lens**

| | | | | | Type LE2F | | | Type LE3F | | | Type LE4F | | | Type LE5F | | |
|---|---|---|---|---|---|---|---|---|---|---|---|---|---|---|---|---|
| Ordering Code | Total LEDs | LED Current (mA) | Average System Watts[1] | Color Temp. | Delivered Lumens[2] | Efficacy (LPW) | BUG Rating | Delivered Lumens[2] | Efficacy (LPW) | BUG Rating | Delivered Lumens[2] | Efficacy (LPW) | BUG Rating | Delivered Lumens[2] | Efficacy (LPW) | BUG Rating |
| DMS50-35W32LED4K-T | 32 | 350 | 37 | 4000K | 4,039 | 109 | B1-U0-G1 | 3,934 | 106 | B1-U0-G1 | 3,895 | 105 | B1-U0-G1 | 3,925 | 106 | B3-U0-G1 |
| DMS50-55W32LED4K-T | 32 | 530 | 55 | 4000K | 5,808 | 106 | B1-U0-G1 | 5,657 | 103 | B1-U0-G1 | 5,602 | 102 | B1-U0-G2 | 5,644 | 103 | B3-U0-G1 |
| DMS50-72W32LED4K-T | 32 | 700 | 73 | 4000K | 7,312 | 101 | B2-U0-G1 | 7,122 | 98 | B1-U0-G2 | 7,052 | 97 | B1-U0-G2 | 7,105 | 98 | B3-U0-G2 |
| DMS50-55W48LED4K-T | 48 | 350 | 54 | 4000K | 6,041 | 113 | B1-U0-G1 | 5,883 | 110 | B1-U0-G1 | 5,826 | 109 | B1-U0-G2 | 5,870 | 110 | B3-U0-G1 |
| DMS50-80W48LED4K-T | 48 | 530 | 80 | 4000K | 8,641 | 108 | B2-U0-G2 | 8,417 | 105 | B2-U0-G2 | 8,335 | 104 | B2-U0-G2 | 8,398 | 105 | B3-U0-G2 |
| DMS50-108W48LED4K-T | 48 | 700 | 106 | 4000K | 10,852 | 103 | B2-U0-G2 | 10,570 | 100 | B2-U0-G2 | 10,467 | 99 | B2-U0-G2 | 10,546 | 100 | B4-U0-G2 |
| DMS50-70W64LED4K-T | 64 | 350 | 69 | 4000K | 7,856 | 113 | B2-U0-G1 | 7,709 | 111 | B1-U0-G2 | 7,697 | 111 | B1-U0-G2 | 7,643 | 110 | B3-U0-G2 |
| DMS50-110W64LED4K-T | 64 | 530 | 105 | 4000K | 11,261 | 107 | B2-U0-G2 | 11,050 | 105 | B2-U0-G2 | 11,034 | 105 | B2-U0-G2 | 10,955 | 104 | B4-U0-G2 |
| DMS50-145W64LED4K-T | 64 | 700 | 141 | 4000K | 14,148 | 101 | B3-U0-G2 | 13,883 | 99 | B2-U0-G2 | 13,862 | 99 | B2-U0-G2 | 13,763 | 98 | B4-U0-G2 |
| DMS50-90W80LED4K-T | 80 | 350 | 86 | 4000K | 9,806 | 114 | B2-U0-G2 | 9,623 | 112 | B2-U0-G2 | 9,608 | 112 | B2-U0-G2 | 9,540 | 111 | B4-U0-G2 |
| DMS50-135W80LED4K-T | 80 | 530 | 131 | 4000K | 14,008 | 107 | B3-U0-G2 | 13,745 | 105 | B2-U0-G2 | 13,724 | 105 | B2-U0-G2 | 13,626 | 104 | B4-U0-G2 |
| DMS50-180W80LED4K-T | 80 | 700 | 174 | 4000K | 17,483 | 100 | B3-U0-G2 | 17,144 | 98 | B3-U0-G2 | 17,269 | 99 | B3-U0-G3 | 17,115 | 98 | B4-U0-G2 |

1. System input wattage may vary based on input voltage, by up to +/- 10% , and based on manufacturer forward voltage, by up to +/- 8%.
2. Lumen values based on photometric tests performed in compliance with IESNA LM-79.

**Note:** Some data may be scaled based on tests of similar, but not identical, luminaires.

# DMS50 Domus LED pendant

## Urban luminaire

### LED Wattage and Lumen Values: 4000K Domus luminaire (continued)

**Sag lens**

| | | | | | Type LE2S | | | Type LE3S | | | Type LE4S | | | Type LE5S | | |
|---|---|---|---|---|---|---|---|---|---|---|---|---|---|---|---|---|
| Ordering Code | Total LEDs | LED Current (mA) | Average System Watts [1] | Color Temp. | Delivered Lumens [2] | Efficacy (LPW) | BUG Rating | Delivered Lumens [2] | Efficacy (LPW) | BUG Rating | Delivered Lumens [2] | Efficacy (LPW) | BUG Rating | Delivered Lumens [2] | Efficacy (LPW) | BUG Rating |
| DMS50-35W32LED4K-T | 32 | 350 | 37 | 4000K | 4,064 | 110 | B1-U0-G1 | 4,005 | 108 | B1-U0-G1 | 4,005 | 107 | B1-U0-G1 | 4,005 | 110 | B1-U0-G1 |
| DMS50-55W32LED4K-T | 32 | 530 | 55 | 4000K | 5,846 | 106 | B1-U0-G1 | 5,759 | 105 | B1-U0-G1 | 5,759 | 104 | B1-U0-G1 | 5,759 | 106 | B1-U0-G1 |
| DMS50-72W32LED4K-T | 32 | 700 | 73 | 4000K | 7,359 | 101 | B2-U0-G1 | 7,250 | 100 | B2-U0-G1 | 7,250 | 99 | B2-U0-G1 | 7,250 | 101 | B2-U0-G1 |
| DMS50-55W48LED4K-T | 48 | 350 | 54 | 4000K | 6,079 | 113 | B1-U0-G1 | 5,990 | 112 | B1-U0-G1 | 5,990 | 111 | B1-U0-G1 | 5,990 | 114 | B1-U0-G1 |
| DMS50-80W48LED4K-T | 48 | 530 | 80 | 4000K | 8,697 | 109 | B2-U0-G2 | 8,569 | 107 | B2-U0-G2 | 8,569 | 106 | B2-U0-G2 | 8,569 | 109 | B2-U0-G2 |
| DMS50-108W48LED4K-T | 48 | 700 | 106 | 4000K | 10,922 | 103 | B2-U0-G2 | 10,761 | 102 | B2-U0-G2 | 10,761 | 101 | B2-U0-G2 | 10,761 | 103 | B2-U0-G2 |
| DMS50-70W64LED4K-T | 64 | 350 | 69 | 4000K | 7,910 | 114 | B2-U0-G2 | 7,849 | 113 | B2-U0-G2 | 7,849 | 113 | B2-U0-G2 | 7,849 | 114 | B2-U0-G2 |
| DMS50-110W64LED4K-T | 64 | 530 | 105 | 4000K | 11,338 | 108 | B2-U0-G2 | 11,250 | 107 | B2-U0-G2 | 11,250 | 107 | B2-U0-G2 | 11,250 | 108 | B2-U0-G2 |
| DMS50-145W64LED4K-T | 64 | 700 | 141 | 4000K | 14,244 | 101 | B3-U0-G2 | 14,134 | 101 | B3-U0-G2 | 14,134 | 100 | B3-U0-G2 | 14,134 | 102 | B3-U0-G2 |
| DMS50-90W80LED4K-T | 80 | 350 | 86 | 4000K | 9,873 | 115 | B2-U0-G2 | 9,797 | 114 | B2-U0-G2 | 9,797 | 114 | B2-U0-G2 | 9,797 | 115 | B2-U0-G2 |
| DMS50-135W80LED4K-T | 80 | 530 | 131 | 4000K | 14,102 | 108 | B3-U0-G2 | 13,993 | 107 | B3-U0-G2 | 13,993 | 107 | B3-U0-G2 | 13,993 | 108 | B3-U0-G2 |
| DMS50-180W80LED4K-T | 80 | 700 | 174 | 4000K | 17,668 | 101 | B3-U0-G2 | 17,526 | 101 | B3-U0-G2 | 17,526 | 100 | B3-U0-G2 | 17,526 | 102 | B3-U0-G2 |

**Globe (ACDR)**

| | | | | | Type LE2A | | | Type LE3A | | | Type LE4A | | |
|---|---|---|---|---|---|---|---|---|---|---|---|---|---|
| Ordering Code | Total LEDs | LED Current (mA) | Average System Watts [1] | Color Temp. | Delivered Lumens [2] | Efficacy (LPW) | BUG Rating | Delivered Lumens [2] | Efficacy (LPW) | BUG Rating | Delivered Lumens [2] | Efficacy (LPW) | BUG Rating |
| DMS50-35W32LED4K-T | 32 | 350 | 37 | 4000K | 4,138 | 112 | B1-U3-G1 | 4,138 | 110 | B1-U2-G1 | 4,063 | 110 | B1-U2-G2 |
| DMS50-55W32LED4K-T | 32 | 530 | 55 | 4000K | 5,952 | 108 | B1-U3-G1 | 5,952 | 107 | B1-U3-G2 | 5,844 | 106 | B1-U3-G2 |
| DMS50-72W32LED4K-T | 32 | 700 | 73 | 4000K | 7,493 | 103 | B2-U3-G2 | 7,493 | 102 | B1-U3-G2 | 7,357 | 101 | B1-U3-G2 |
| DMS50-55W48LED4K-T | 48 | 350 | 54 | 4000K | 6,190 | 115 | B1-U3-G1 | 6,190 | 114 | B1-U3-G2 | 6,078 | 113 | B1-U3-G2 |
| DMS50-80W48LED4K-T | 48 | 530 | 80 | 4000K | 8,855 | 111 | B2-U3-G2 | 8,855 | 109 | B2-U3-G2 | 8,695 | 109 | B1-U3-G3 |
| DMS50-108W48LED4K-T | 48 | 700 | 106 | 4000K | 11,120 | 105 | B2-U3-G2 | 11,120 | 104 | B2-U3-G2 | 10,919 | 103 | B2-U3-G3 |
| DMS50-70W64LED4K-T | 64 | 350 | 69 | 4000K | 7,933 | 114 | B2-U3-G2 | 7,933 | 112 | B2-U3-G2 | 7,844 | 113 | B2-U3-G2 |
| DMS50-110W64LED4K-T | 64 | 530 | 105 | 4000K | 11,371 | 108 | B2-U3-G2 | 11,371 | 106 | B2-U3-G2 | 11,243 | 107 | B2-U3-G3 |
| DMS50-145W64LED4K-T | 64 | 700 | 141 | 4000K | 14,286 | 102 | B3-U3-G3 | 14,286 | 100 | B3-U3-G3 | 14,125 | 101 | B2-U3-G3 |
| DMS50-90W80LED4K-T | 80 | 350 | 86 | 4000K | 9,902 | 115 | B2-U3-G2 | 9,902 | 113 | B2-U3-G2 | 9,791 | 114 | B2-U3-G3 |
| DMS50-135W80LED4K-T | 80 | 530 | 131 | 4000K | 14,144 | 108 | B3-U3-G3 | 14,144 | 106 | B3-U3-G3 | 13,985 | 107 | B2-U3-G3 |
| DMS50-180W80LED4K-T | 80 | 700 | 174 | 4000K | 17,715 | 102 | B3-U3-G3 | 17,715 | 100 | B3-U3-G3 | 17,515 | 101 | B3-U3-G3 |

1. System input wattage may vary based on input voltage, by up to +/- 10% , and based on manufacturer forward voltage, by up to +/- 8%.
2. Lumen values based on photometric tests performed in compliance with IESNA LM-79.

**Note:** Some data may be scaled based on tests of similar, but not identical, luminaires.

# DMS50 Domus LED pendant

## Urban luminaire

### LED Wattage and Lumen Values: 3000K Domus luminaire

**Flat lens**

| | | | | | Type LE2F | | | Type LE3F | | | Type LE4F | | | Type LE5F | | |
|---|---|---|---|---|---|---|---|---|---|---|---|---|---|---|---|---|
| Ordering Code | Total LEDs | LED Current (mA) | Average System Watts[1] | Color Temp. | Delivered Lumens[2] | Efficacy (LPW) | BUG Rating | Delivered Lumens[2] | Efficacy (LPW) | BUG Rating | Delivered Lumens[2] | Efficacy (LPW) | BUG Rating | Delivered Lumens[2] | Efficacy (LPW) | BUG Rating |
| DMS50-35W32LED3K-T | 32 | 350 | 37 | 3000K | 3,641 | 98 | B1-U0-G1 | 3,547 | 96 | B1-U0-G1 | 3,512 | 95 | B1-U0-G1 | 3,538 | 95 | B2-U0-G1 |
| DMS50-55W32LED3K-T | 32 | 530 | 55 | 3000K | 5,237 | 95 | B1-U0-G1 | 5,101 | 93 | B1-U0-G1 | 5,051 | 92 | B1-U0-G1 | 5,089 | 93 | B3-U0-G1 |
| DMS50-72W32LED3K-T | 32 | 700 | 73 | 3000K | 6,592 | 91 | B2-U0-G1 | 6,421 | 88 | B1-U0-G1 | 6,358 | 87 | B1-U0-G2 | 6,406 | 88 | B3-U0-G1 |
| DMS50-55W48LED3K-T | 48 | 350 | 54 | 3000K | 5,446 | 102 | B1-U0-G1 | 5,305 | 99 | B1-U0-G1 | 5,253 | 98 | B1-U0-G2 | 5,292 | 99 | B3-U0-G1 |
| DMS50-80W48LED3K-T | 48 | 530 | 80 | 3000K | 7,791 | 97 | B2-U0-G1 | 7,589 | 95 | B1-U0-G2 | 7,515 | 94 | B1-U0-G2 | 7,571 | 95 | B3-U0-G2 |
| DMS50-108W48LED3K-T | 48 | 700 | 106 | 3000K | 9,784 | 93 | B2-U0-G2 | 9,530 | 90 | B2-U0-G2 | 9,437 | 89 | B2-U0-G2 | 9,508 | 90 | B4-U0-G2 |
| DMS50-70W64LED3K-T | 64 | 350 | 69 | 3000K | 7,083 | 102 | B2-U0-G1 | 6,951 | 100 | B1-U0-G2 | 6,940 | 100 | B1-U0-G2 | 6,891 | 99 | B3-U0-G2 |
| DMS50-110W64LED3K-T | 64 | 530 | 105 | 3000K | 10,153 | 96 | B2-U0-G2 | 9,963 | 95 | B2-U0-G2 | 9,948 | 94 | B2-U0-G2 | 9,877 | 94 | B4-U0-G2 |
| DMS50-145W64LED3K-T | 64 | 700 | 141 | 3000K | 12,756 | 91 | B3-U0-G2 | 12,517 | 89 | B2-U0-G2 | 12,498 | 89 | B2-U0-G2 | 12,409 | 88 | B4-U0-G2 |
| DMS50-90W80LED3K-T | 80 | 350 | 86 | 3000K | 8,842 | 103 | B2-U0-G2 | 8,676 | 101 | B2-U0-G2 | 8,663 | 101 | B2-U0-G2 | 8,601 | 100 | B3-U0-G2 |
| DMS50-135W80LED3K-T | 80 | 530 | 131 | 3000K | 12,629 | 97 | B3-U0-G2 | 12,392 | 95 | B2-U0-G2 | 12,374 | 95 | B2-U0-G2 | 12,286 | 94 | B4-U0-G2 |
| DMS50-180W80LED3K-T | 80 | 700 | 174 | 3000K | 15,817 | 91 | B3-U0-G2 | 15,521 | 89 | B2-U0-G2 | 15,497 | 89 | B2-U0-G3 | 15,387 | 88 | B4-U0-G2 |

**Sag lens**

| | | | | | Type LE2S | | | Type LE3S | | | Type LE4S | | | Type LE5S | | |
|---|---|---|---|---|---|---|---|---|---|---|---|---|---|---|---|---|
| Ordering Code | Total LEDs | LED Current (mA) | Average System Watts[1] | Color Temp. | Delivered Lumens[2] | Efficacy (LPW) | BUG Rating | Delivered Lumens[2] | Efficacy (LPW) | BUG Rating | Delivered Lumens[2] | Efficacy (LPW) | BUG Rating | Delivered Lumens[2] | Efficacy (LPW) | BUG Rating |
| DMS50-35W32LED3K-T | 32 | 350 | 37 | 3000K | 3,665 | 99 | B1-U0-G1 | 3,611 | 97 | B1-U0-G1 | 3,576 | 96 | B1-U0-G1 | 3,668 | 99 | B3-U0-G1 |
| DMS50-55W32LED3K-T | 32 | 530 | 55 | 3000K | 5,270 | 96 | B1-U0-G1 | 5,193 | 94 | B1-U0-G1 | 5,144 | 94 | B1-U0-G2 | 5,276 | 96 | B3-U0-G1 |
| DMS50-72W32LED3K-T | 32 | 700 | 73 | 3000K | 6,635 | 91 | B2-U0-G1 | 6,537 | 90 | B1-U0-G2 | 6,475 | 89 | B1-U0-G2 | 6,641 | 91 | B3-U0-G2 |
| DMS50-55W48LED3K-T | 48 | 350 | 54 | 3000K | 5,481 | 102 | B1-U0-G1 | 5,401 | 101 | B1-U0-G1 | 5,349 | 100 | B1-U0-G2 | 5,487 | 102 | B3-U0-G1 |
| DMS50-80W48LED3K-T | 48 | 530 | 80 | 3000K | 7,842 | 98 | B2-U0-G2 | 7,726 | 97 | B1-U0-G2 | 7,653 | 96 | B1-U0-G2 | 7,849 | 98 | B3-U0-G2 |
| DMS50-108W48LED3K-T | 48 | 700 | 106 | 3000K | 9,847 | 93 | B2-U0-G2 | 9,702 | 92 | B2-U0-G2 | 9,610 | 91 | B2-U0-G2 | 9,857 | 93 | B4-U0-G2 |
| DMS50-70W64LED3K-T | 64 | 350 | 69 | 3000K | 7,131 | 103 | B2-U0-G1 | 7,076 | 102 | B1-U0-G2 | 7,067 | 102 | B1-U0-G2 | 7,144 | 103 | B3-U0-G2 |
| DMS50-110W64LED3K-T | 64 | 530 | 105 | 3000K | 10,222 | 97 | B2-U0-G2 | 10,143 | 96 | B2-U0-G2 | 10,130 | 96 | B2-U0-G2 | 10,239 | 97 | B4-U0-G2 |
| DMS50-145W64LED3K-T | 64 | 700 | 141 | 3000K | 12,842 | 91 | B2-U0-G2 | 12,743 | 91 | B2-U0-G2 | 12,727 | 91 | B2-U0-G2 | 12,864 | 92 | B4-U0-G2 |
| DMS50-90W80LED3K-T | 80 | 350 | 86 | 3000K | 8,901 | 104 | B2-U0-G2 | 8,833 | 103 | B2-U0-G2 | 8,822 | 103 | B2-U0-G2 | 8,917 | 104 | B4-U0-G2 |
| DMS50-135W80LED3K-T | 80 | 530 | 131 | 3000K | 12,715 | 97 | B2-U0-G2 | 12,616 | 97 | B2-U0-G2 | 12,601 | 96 | B2-U0-G2 | 12,736 | 98 | B4-U0-G2 |
| DMS50-180W80LED3K-T | 80 | 700 | 174 | 3000K | 15,924 | 91 | B3-U0-G2 | 15,801 | 91 | B2-U0-G2 | 15,782 | 91 | B2-U0-G3 | 15,951 | 92 | B4-U0-G2 |

1. System input wattage may vary based on input voltage, by up to +/- 10% , and based on manufacturer forward voltage, by up to +/- 8%.
2. Lumen values based on photometric tests performed in compliance with IESNA LM-79.

**Note:** Some data may be scaled based on tests of similar, but not identical, luminaires.

# DMS50 Domus LED pendant

## Urban luminaire

### LED Wattage and Lumen Values: 3000K Domus luminaire (continued)

**Globe (ACDR)**

| | | | | | Type LE2A | | | Type LE3A | | | Type LE4A | | |
|---|---|---|---|---|---|---|---|---|---|---|---|---|---|
| Ordering Code | Total LEDs | LED Current (mA) | Average System Watts [1] | Color Temp. | Delivered Lumens [2] | Efficacy (LPW) | BUG Rating | Delivered Lumens [2] | Efficacy (LPW) | BUG Rating | Delivered Lumens [2] | Efficacy (LPW) | BUG Rating |
| DMS50-35W32LED3K-T | 32 | 350 | 37 | 3000K | 3,731 | 101 | B1-U2-G1 | 3,686 | 99 | B1-U2-G1 | 3,664 | 99 | B1-U2-G2 |
| DMS50-55W32LED3K-T | 32 | 530 | 55 | 3000K | 5,366 | 98 | B1-U3-G1 | 5,302 | 96 | B1-U3-G2 | 5,269 | 96 | B1-U3-G2 |
| DMS50-72W32LED3K-T | 32 | 700 | 73 | 3000K | 6,755 | 93 | B1-U3-G2 | 6,674 | 92 | B1-U3-G2 | 6,633 | 91 | B1-U3-G2 |
| DMS50-55W48LED3K-T | 48 | 350 | 54 | 3000K | 5,581 | 104 | B1-U3-G1 | 5,514 | 103 | B1-U3-G2 | 5,480 | 102 | B1-U3-G2 |
| DMS50-80W48LED3K-T | 48 | 530 | 80 | 3000K | 7,984 | 100 | B2-U3-G2 | 7,888 | 99 | B1-U3-G2 | 7,839 | 98 | B1-U3-G2 |
| DMS50-108W48LED3K-T | 48 | 700 | 106 | 3000K | 10,026 | 95 | B2-U3-G2 | 9,906 | 94 | B2-U3-G2 | 9,845 | 93 | B2-U3-G3 |
| DMS50-70W64LED3K-T | 64 | 350 | 69 | 3000K | 7,153 | 103 | B2-U3-G2 | 7,025 | 101 | B2-U3-G2 | 7,072 | 102 | B1-U3-G2 |
| DMS50-110W64LED3K-T | 64 | 530 | 105 | 3000K | 10,253 | 97 | B2-U3-G2 | 10,069 | 96 | B2-U3-G2 | 10,137 | 96 | B2-U3-G3 |
| DMS50-145W64LED3K-T | 64 | 700 | 141 | 3000K | 12,881 | 92 | B3-U3-G3 | 12,651 | 90 | B2-U3-G2 | 12,736 | 91 | B2-U3-G3 |
| DMS50-90W80LED3K-T | 80 | 350 | 86 | 3000K | 8,928 | 104 | B2-U3-G2 | 8,768 | 102 | B2-U3-G2 | 8,827 | 103 | B2-U3-G2 |
| DMS50-135W80LED3K-T | 80 | 530 | 131 | 3000K | 12,753 | 98 | B3-U3-G3 | 12,525 | 96 | B2-U3-G2 | 12,609 | 97 | B2-U3-G3 |
| DMS50-180W80LED3K-T | 80 | 700 | 174 | 3000K | 15,972 | 92 | B3-U3-G3 | 15,687 | 90 | B3-U3-G3 | 15,792 | 91 | B3-U3-G3 |

1. System input wattage may vary based on input voltage, by up to +/- 10% , and based on manufacturer forward voltage, by up to +/- 8%.
2. Lumen values based on photometric tests performed in compliance with IESNA LM-79.

**Note:** Some data may be scaled based on tests of similar, but not identical, luminaires.

## Specifications:

### Housing

In a round shape, this housing is made of die cast A380 aluminum, c/w a watertight grommet, mechanically assembled to the bracket with four bolts 5/16 18 UNC. This suspension system permits for a full rotation of the luminaire in 90° increments.

### Access-mechanism

A die cast A360 aluminum technical ring with latch, hinge and a cast in decorative skirt. The mechanism shall offer tool free access to the inside of the luminaire. An embedded memory retentive gasket shall ensure weatherproofing.

### Light engine

LEDgine composed of 5 main components:
**Heat Sink / Lens / LED lamp / Driver / Optical System**

Electrical components are RoHS compliant.

### LED engine

LED type: Philips Lumileds LUXEON T. Composed of high-performance white LEDs. Color temperature as per ANSI/NEMA bin Neutral White, 4000 Kelvin nominal (3985K +/- 275K or 3710K to 4260K) or Warm white, 3000 Kelvin nominal (3045K +/- 175K or 2870K to 3220K), CRI 70 Min. 75 Typical.

### Lens

**LExF / LExS**: Made of soda lime tempered glass lens, mechanically assembled and sealed onto the lower part of the heat sink.
**LExA** (Globe): Made of one-piece seamless injection-molded impact-resistant (DR) acrylic having an inner prismatic surface. The globe is mechanically assembled and sealed onto the lower part of the heat sink.

### Heat sink

Made of cast aluminum optimizing the LEDs efficiency and life. Product does not use any cooling device with moving parts (only passive cooling device).

### Driver

Driver comes standard with dimming compatible 0-10V. High power factor of 95%. Electronic driver, operating range 50/60 Hz. Auto adjusting universal voltage input from 120 to 277 VAC rated for both application line to line or line to neutral, Class I, THD of 20% max. Maximum ambient operating temperature from 40F(40C) to 130F(55C) degrees. Certified in compliance to UL1310 cULus requirement. Dry and damp location. Assembled on a unitized removable tray with Tyco quick disconnect plug resisting to 221F(105C) degrees. The current supplying the LEDs will be reduced by the driver if the driver experiences internal overheating as a protection to the LEDs and the electrical components. Output is protected from short circuits, voltage overload and current overload. Automatic recovery after correction. Standard built in driver surge protection of 2.5kV (min).

### Optical system

Composed of high performance optical grade PMMA acrylic refractor lenses to achieve desired distribution optimized to get maximum spacing, target lumens and a superior lighting uniformity. Optical system is rated IP66. Performance shall be tested per LM 63, LM 79 and TM 15 (IESNA) certifying its photometric performance. Street side indicated. Flat lens (F optics) is Dark Sky compliant with 0% uplight and U0 per IESNA TM 15.

# DMS50 Domus LED pendant

## Urban luminaire

### Specifications (continued):

### Optical system (continued):

**Prismatic globe:** IP66 rated optical system, composed of individual pre-oriented lens to achieve desired distribution, assembled with globe having an inner prismatic surface permanently sealed onto the lower part of the heat sink.

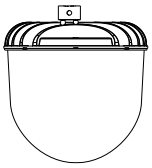

**LE2A** - Type II (ASYM) with globe (ACDR)
**LE3A** - Type III (ASYM) with globe (ACDR)
**LE4A** - Type IV (ASYM) with globe (ACDR)

**Sag lens:** IP66 rated optical system, composed of individual pre-oriented lens to achieve desired distribution, assembled with a tempered-glass sag lens permanently sealed onto the lower part of the heat sink.

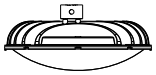

**LE2S** - Type II (ASYM) Sag glass lens
**LE3S** - Type III (ASYM) Sag glass lens
**LE4S** - Type IV (ASYM) Sag glass lens
**LE5S** - Type V (SYMM) Sag glass lens

**Flat lens:** IP66 rated optical system, composed of individual pre-oriented lens to achieve desired distribution, assembled with a tempered-glass flat lens permanently sealed onto the lower part of the heat sink.

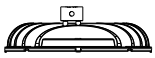

**LE2F** - Type II (ASYM) Flat glass lens
**LE3F** - Type III (ASYM) Flat glass lens
**LE4F** - Type IV (ASYM) Flat glass lens
**LE5F** - Type V (SYMM) Flat glass lens

### Driver options

**AST**: Pre-set driver for progressive start-up of the LED module(s) to optimize energy management and enhance visual comfort at start-up.

**CLO**: Pre-set driver to manage the lumen depreciation by adjusting the power given to the LEDs offering the same lighting intensity during the entire lifespan of the LED module.

**DALI**: Pre-set driver compatible with the DALI control system.

**OTL**: Pre-set driver to signal end of life of the LED module(s) for better fixture management.

**DMG**: Dimmable driver 0-10V.

**CDMG**: Dynadimmer standard dimming functionalities including pre-programmed scenarios to suit many applications and needs from safety to maximum energy savings.

| Ordering Code | Scenario | Dimming Time | Dimming Level |
|---|---|---|---|
| CDMG**S25** | Safety | 4 hours | 25% power dimming |
| CDMG**S50** | Safety | 4 hours | 50% power dimming |
| CDMG**S75** | Safety | 4 hours | 75% power dimming |
| CDMG**M25** | Median | 6 hours | 25% power dimming |
| CDMG**M50** | Median | 6 hours | 50% power dimming |
| CDMG**M75** | Median | 6 hours | 75% power dimming |
| CDMG**E25** | Economy | 8 hours | 25% power dimming |
| CDMG**E50** | Economy | 8 hours | 50% power dimming |
| CDMG**E75** | Economy | 8 hours | 75% power dimming |

### Surge protector

Surge protector tested in accordance with ANSI/IEEE C62.45 per ANSI/IEEE C62.41.2 Scenario I Category C High Exposure 10kV/10kA waveforms for Line Ground, Line Neutral and Neutral Ground, and in accordance with U.S. DOE (Department of Energy) MSSLC (Municipal Solid State Street Lighting Consortium) model specification for LED roadway luminaires electrical immunity requirements for High Test Level 10kV / 10kA. **SP2** 20kV/20kA optional.

### Luminaire adaptor

**MA1:** The luminaire is suspended by means of a mounting adaptor with a 1¼" (32mm) NPT threaded hole accepting a threaded tube from the mounting. Retrofit adaptor for existing mounting

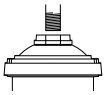

**MA2:** 1½" (38mm) NPT threaded hole accepting threaded tube from the mounting. Retrofit adaptor for existing mounting.

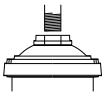

**SMA:** The luminaire is suspended by means of a decorative side-mounted cast aluminum adaptor. This adaptor accepts tubes from 1⅝" to 2⅜" (41 to 60 mm) and is adjustable to more or less 5°. The adaptor features a cast aluminum decorative cover and finial.

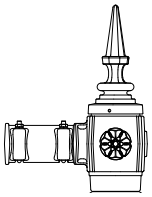

**SMB:** The luminaire is suspended by means of a decorative side-mounted cast aluminum adaptor. This adaptor accepts tubes from 1⅝" to 2⅜" (41 to 60 mm) and is adjustable to more or less 5°.

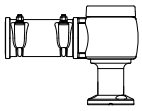

# DMS50 Domus LED pendant

Urban luminaire

## Specifications (continued):

### Luminaire options

**BO:** Bridge and Overpass

**HS:** House side shield

**PH7:** Photoelectric cell, bottom type

**PH8:** Photoelectric Cell, Twist-lock Type. Allows a 90 degree rotation.

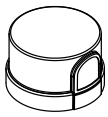

**PHXL:** Extended life photoelectric cell, Twist-lock Type. Allows a 90 degree rotation.

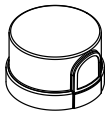

**PH9:** Shorting cap, Twist-lock Type

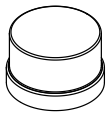

**RC:** Receptacle 3 pins

**RCD:** Receptacle 5 pins

**RCD7:** Receptacle 7 pins

**SP2:** Integral surge protector

### Finish

In accordance with the AAMA 2603 standard. Application of polyester powder coat paint (4 mils/100 microns) with +/- 1 mils/24 microns of tolerance. The Thermosetting resins provides a discoloration esistant finish in accordance with the ASTM D2244 standard, as well as luster retention in keeping with the ASTM D523 standard and humidity proof in accordance with the ASTM D2247 standard. The surface treatment achieves a minimum of 2000 hours for salt spray resistant finish in accordance with testing performed and per ASTM B117 standard.

**Finish Options Include:**

**BE2TX**: Textured Midnight Blue

**BE6TX**: Textured Ocean Blue

**BE8TX**: Textured Royal Blue

**BG2TX**: Textured Sandstone

**BKTX**: Textured Black

**BRTX**: Textured Bronze

**GN4TX**: Textured Blue Green

**GN6TX**: Textured Forest Green

**GN8TX**: Textured Dark Forest Green

**GNTX**: Textured Green

**GR**: Gray Sandtex

**GY3TX**: Textured Medium Grey

**NP**: Natural Aluminum

**RD2TX**: Textured Burgundy

**RD4TX**: Textured Scarlet

**TG**: Hammer-tone Gold

**WHTX**: Textured White

### Wiring

Gauge (#14) TEW/AWM 1015 or 1230 wires, 6" (152mm) minimum exceeding from luminaire.

### Hardware

All exposed screws shall be complete with Ceramic primer-seal base coat to reduce seizing of the parts and offers a high resistance to corrosion. All seals and sealing devices are made and/or lined with EPDM and/or silicone and/or rubber.

### Luminaire useful life

Refer to IES files for energy consumption and delivered lumens for each option. Based on ISTMT in situ thermal testing in accordance with UL1598 and UL8750, Philips System Reliability Tool, Philips Advance data and Philips Lumileds LM-80/TM-21 data, expected to reach 100,000+ hours with >L70 lumen maintenance @ 25°C. Luminaire Useful Life accounts for LED lumen maintenance AND all of these additional factors including: LED life, driver life, PCB substrate, solder joints, on/off cycles, burning hours and corrosion. Entire luminaire is rated for operation in ambient temperature of -40°C / -40°F up to +35°C / +95°F.

### LED products (manufacturing standard)

The electronic components sensitive to electrostatic discharge (ESD) such as light emitting diodes (LEDs) are assembled in compliance with IEC61340 5 1 and ANSI/ESD S20.20 standards so as to eliminate ESD events that could decrease the useful life of the product.

### Quality control

Manufactured to ISO 9001 2008 standards and ISO 14001-2004 International Quality Standards Certification.

### Vibration resistance

Meets the ANSI C136.31, American National Standard for Roadway Luminaire Vibration specifications for Bridge/overpass applications. (Tested for 3G over 100 000 cycles)

### Certifications and Compliance

CSA, cULus Listed for Canada and USA. Domus LED luminaires are DesignLights Consortium qualified.

# DMS50 Domus LED pendant

## Urban luminaire

### Specifications (continued):

**Poles & Brackets** Sample configurations.

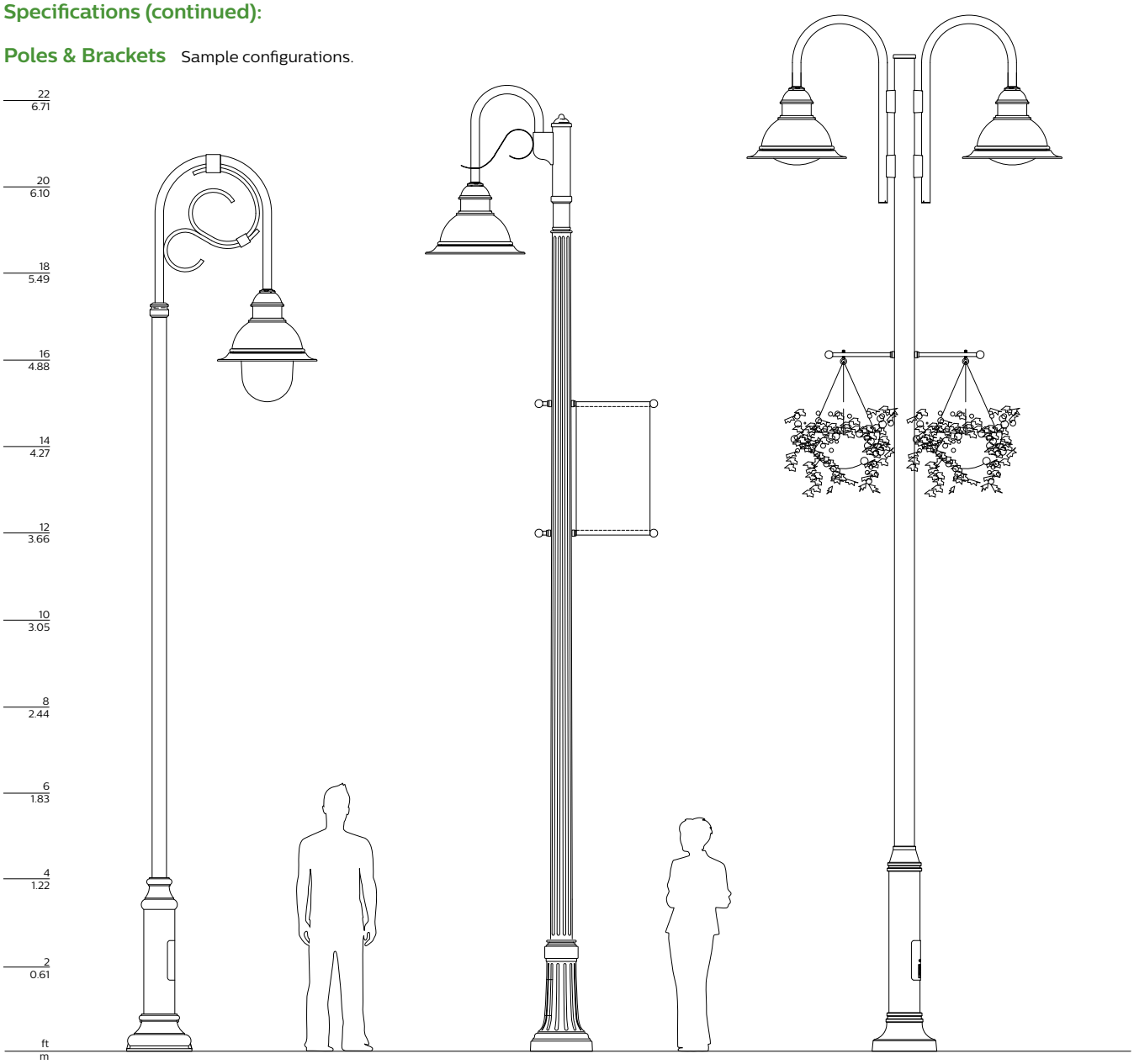


**Luminaire:** DMS50-LE3A
**Mounting:** NM-1A
**Pole:** RA61

**Luminaire:** DMS50-LE2F
**Mounting:** LM-1A
**Pole:** RTA90-BA

**Luminaire:** DMS50-LE5S
**Mounting:** CN5-2
**Pole:** SSM8-PS

© 2016 Philips Lighting Holding B.V. All rights reserved.
Philips reserves the right to make changes in specifications and/or to discontinue any product at any time without notice or obligation and will not be liable for any consequences resulting from the use of this publication.
philips.com/luminaires

Philips Lighting North America Corporation
200 Franklin Square Drive, Somerset, NJ 08873
Tel. 855-486-2216

Philips Lighting Canada Ltd.
281 Hillmount Rd, Markham, ON, Canada L6C 2S3
Tel. 800-668-9008

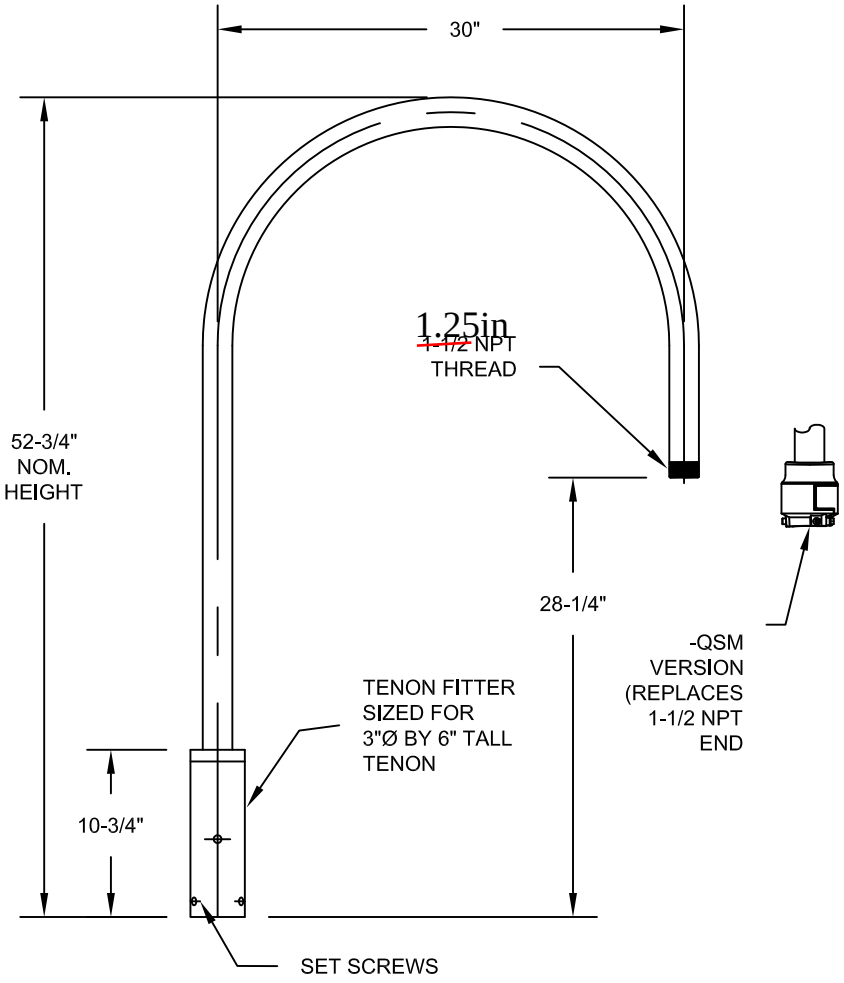


***ORDERING INFORMATION***

**EXAMPLE:** *1BC90R15F BK*

**1BC90R15F** BK RFD295470

BISHOPS CROOK
SINGLE ARM
TENON MOUNT

FINISH
BK = BLACK
DB = BRONZE
DG = DARK GREEN
TDC = CUSTOM
SELECT (RAL COLOR)
CMC = CUSTOM MATCH
(FROM CUSTOMER
COLOR SAMPLE)
TBD = TO BE
DETERMINED LATER

OPTION
-QSM = QUICK STEM MOUNT
(REPLACES 1-1/2 NPT
THREADED END)

# Specifications

**GENERAL DESCRIPTION**
The Bishops Crook decorative arm shall be all aluminum construction.

**MATERIALS**
The arm tenon fitter and arm shall be of extruded aluminum pipe. The interface between the tenon fitter and arm shall be cast aluminum. The interface shall be circumferentially welded to the tenon fitter and the arm. All mounting hardware shall be tamper resistant stainless steel.

**DIMENSIONS**
The tenon fitter is designed to slipfit a 3 inch O.D. by 6 inch tall tenon. The arm rises approximately 52-3/4 inches above the bottom of the tenon fitter and has a span of 30 inches from center line of the tenon fitter to the end of the arm. Stainless steel set screws are located in the tenon fitter for fastening the arm to the pole tenon. The arm terminates in 1-1/2 inch NPT thread. With the option -QSM, the arm terminates in a unique Quick Stem Mount that matches a mating assembly on a luminaire.

**FINISH**
The arm shall be furnished standard with a powder coat finish.

RFD295470- 1-1/4IN NPT threaded hub

HOLOPHANE®
LEADER IN LIGHTING SOLUTIONS
An AcuityBrandsCompany

# Bishops Crook Series Arm

Aluminum Crossarm, Tenon Mount, Single

| | | |
|---|---|---|
| ORDER #: | TYPE: | DRAWING #: US-4159 |
| REVISION: | REVISION DATE: | |
| DRAWN: RAF | ORIGIN DATE: 4/26/2018 | PAGE: 1 of 1 |

THIS DRAWING, WHEN APPROVED, SHALL BECOME THE COMPLETE SPECIFICATION FOR THE MATERIAL TO BE FURNISHED BY HOLOPHANE ON THE ORDER NOTED ABOVE. A UNIT OF SIMILAR DESIGN MAY BE SUPPLIED, BUT ONLY AFTER APPROVAL BY THE CUSTOMER IN WRITING. ON POLE ORDERS AN ANCHOR BOLT TEMPLATE PRINT WILL BE SUPPLIED WITH EACH ANCHOR BOLT ORDER TO MATCH THE POLE PROVIDED. THIS PRINT IS THE PROPERTY OF HOLOPHANE AND IS LOANED SUBJECT TO RETURN UPON DEMAND AND UPON EXPRESS CONDITION THAT IT WILL NOT BE USED DIRECTLY OR INDIRECTLY IN ANY WAY DETRIMENTAL TO OUR INTERESTS, AND ONLY IN CONNECTION WITH MATERIAL FURNISHED BY HOLOPHANE.

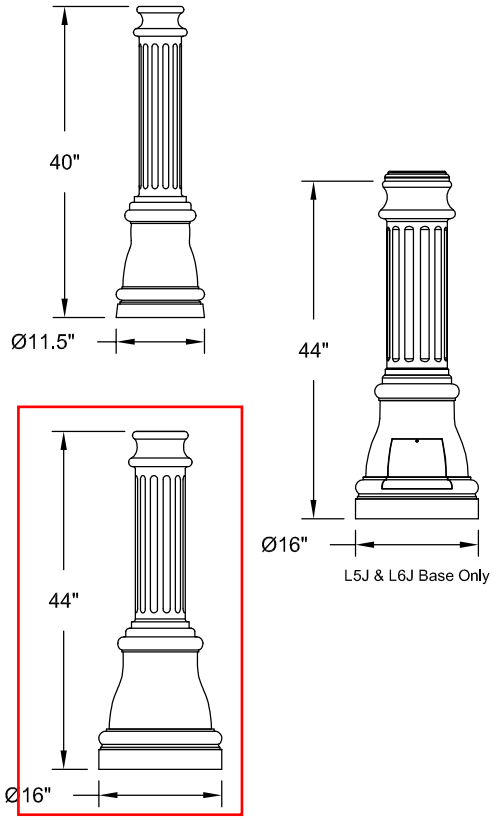


Shaft Style

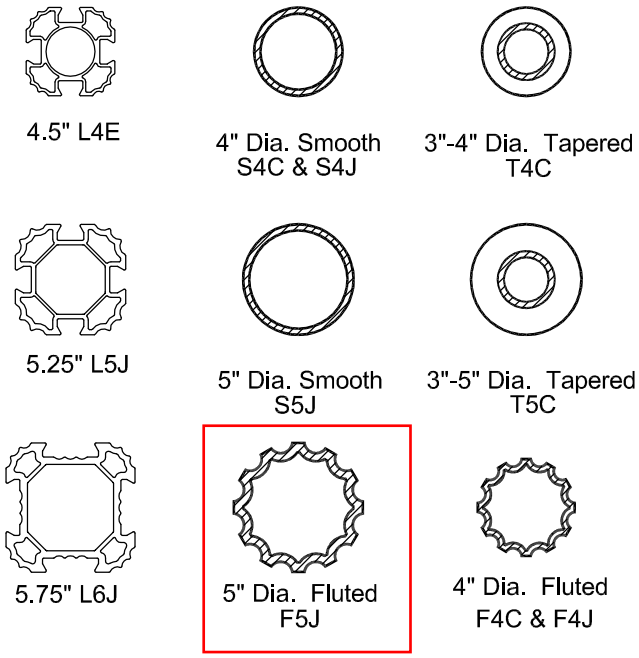


# CHARLESTON™ Aluminum Pole

Architectural Outdoor

## ORDERING INFORMATION:

| Post | Material | Height | Shaft Style |
|---|---|---|---|
| CH | A | 16 | F5J |

**Post:** CH = Charleston

**Material:** A = Aluminum

**Height:**
08 = 8'
09 = 9'
10 = 10'
11 = 11'
12 = 12'
13 = 13'
14 = 14'
15 = 15'
16 = 16'
17 = 17'
18 = 18'
19 = 19'
20 = 20'
21 = 21'
22 = 22'

**Shaft Style:**
F4C = 4" DIA. Fluted, .125 Wall
F4J = 4" DIA. Fluted, .25 Wall
F5J = 5" DIA. Fluted, .25 Wall
L4E = SiteLink 4.5" Fluted, .156 Wall
L5J = SiteLink 5.25" Fluted, .25" Wall
L6J = SiteLink 5.75" Fluted, .25" Wall
S4C = 4" DIA. Smooth, .125 Wall
S4J = 4" DIA. Smooth, .25 Wall
S5J = 5" DIA. Smooth, .25 Wall
T4C = 3" to 4" DIA. Tapered, .125 Wall
T5C = 3" to 5" DIA. Tapered, .125 Wall

| Base | Tenon | Mounting | Finish |
|---|---|---|---|
| 16 | P09 | ABG | BK |

**Base:**
12 = 12" Round (TMP-60) (L4E = TMP40004)
16 = 16" Round (TMP-105) (L4E = TMP-105) (L5J & L6J = TMP40015)

**Tenon:**
P01 = POLE CAP
P05 = 3" O.D. X 4" LG.
P07 = 3" O.D. X 3" LG.
P08 = 3" O.D. X 5" LG.
P09 = 3" O.D. X 6" LG.
P10 = 3" O.D. X 9" LG.
P11 = 4.38 O.D. x 12" LG.
(3" O.D. = ACTUAL SIZE IS 2.88" O.D.)
P12 = 3" O.D. X 12" LG.
P13 = 3" O.D. X 8" LG.
P14 = 3" O.D. X 14" LG.
P15 = 3.5" O.D. X 8" LG.
P16 = 4.5" O.D. X 10" LG.
PT1 = VGC Plate

**Mounting:**
ABG = Anchor Bolts Galvanized Steel
LAB = Less Anchor Bolts
DBB = Direct Burial Base Galvanized Steel
(12" Base = ADBB1R2)
(16" Base = ADBB1R4)

**Finish:**
BK = Black
BD = Dark Blue
BZ = Bronze
GH = Graphite
GN = Green
GR = Gray
PP = Prime Painted
SL = Silver
WH = White

**Accessories:**
WDA17BRKWYKITXX = BREAKAWAY KIT

**Options:**
EXXXY² = Provision for eye bolt.
LXXXY² = Large provision.
RXXXY² = Receptacle provision.
SXXXY² = Small provision.
FGB = GFI receptacle in base

## SPECIFICATIONS

**DESCRIPTION**
The lighting post shall be all aluminum, one-piece construction, with a classic tapered and fluted base design.

**MATERIALS**
The base and fluted tapered cast shaft shall be heavy wall, cast aluminum produced from certified ASTM 356.1 ingot per ASTM B-179-95a or ASTM B26-95. The straight shafts shall be extruded from aluminum, ASTM 6061 alloy. The tapered shaft shall be extruded from aluminum, ASTM 6063 alloy, spun to a tapered shape. All hardware shall be stainless steel. Anchor bolts to be completely hot dip galvanized.

**CONSTRUCTION**
The shaft shall be double welded to the base casting and shipped as one piece for maximum structural integrity. The shaft shall be welded inside the base casting at the top of the access door, and externally where the shaft exits the base. All welding shall be per ANSI/AWS

**DIMENSIONS**
The post shall be X'- XX" in height with a 12" or 16" diameter base. The shaft diameter shall be XX". At the top of the post, an integral tenon with a transitional donut shall be provided for luminaire mounting.

**INSTALLATION**
The post shall be provided with four, hot dip galvanized L-type anchor bolts. A door shall be provided in the base for anchorage and wiring access. A grounding screw shall be provided inside the base opposite the door.

² - Replace "XXX" with height from grade (inches), can be up to 3 digits. Must use whole numbers. Leading zeros are not used. Replace Y with orientation from hand hole (A=0, B=90, C=180, D=270). Add multiple provisions as necessary to cover each location. Must validate EPA restrictions for banners.

HOLOPHANE® LEADER IN LIGHTING SOLUTIONS
An AcuityBrandsCompany

© 2010 Acuity Brands Lighting, Inc., All Rights Reserved

THIS DRAWING, WHEN APPROVED, SHALL BECOME THE COMPLETE SPECIFICATION FOR THE MATERIAL TO BE FURNISHED BY HOLOPHANE ON THE ORDER NOTED ABOVE. A UNIT OF SIMILAR DESIGN MAY BE SUPPLIED, BUT ONLY AFTER APPROVAL BY THE CUSTOMER IN WRITING. DO NOT CHANGE ANCHOR BOLT TEMPLATE. THIS POLE WILL BE SUPPLIED WITH HAND HOLE COVER TEMPLATE. THIS POLE PROVIDED THIS PRINT IS THE PROPERTY OF HOLOPHANE AND IS LOANED SUBJECT TO RETURN UPON DEMAND AND UPON EXPRESS CONDITION THAT IT WILL NOT BE USED DIRECTLY OR INDIRECTLY IN ANY WAY DETRIMENTAL TO OUR INTERESTS, AND ONLY IN CONNECTION WITH MATERIAL FURNISHED BY HOLOPHANE.

ORDER #:
TYPE:
DRAWN: MAB
DATE: 11/14/18
DWG #: POL_CHA

# ANCHORAGE GUIDE

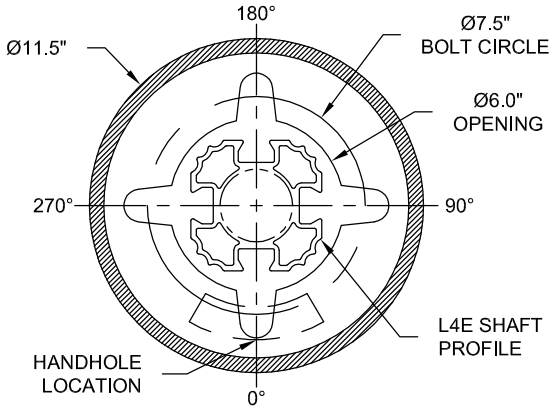


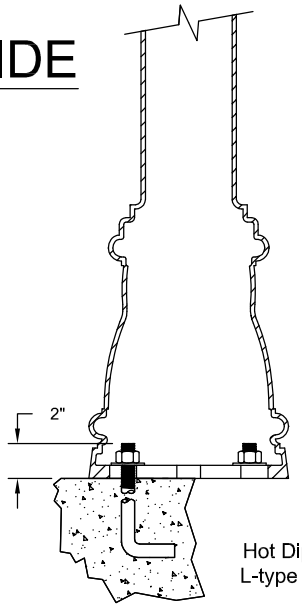


CHA 12"
Ø 3/4"
Hot Dip Galvanized
L-type Anchor Bolts
(4 per Post)

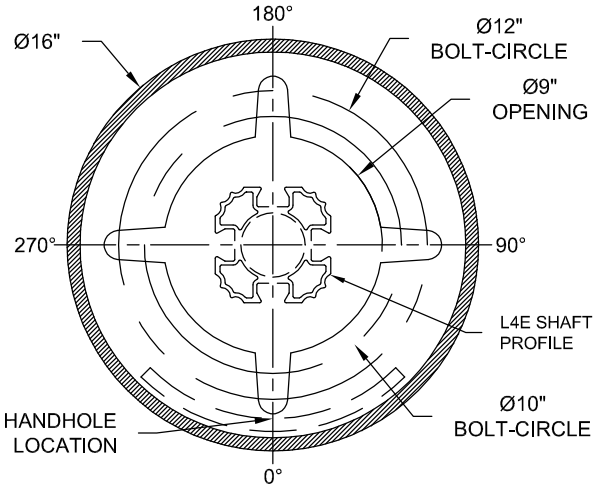


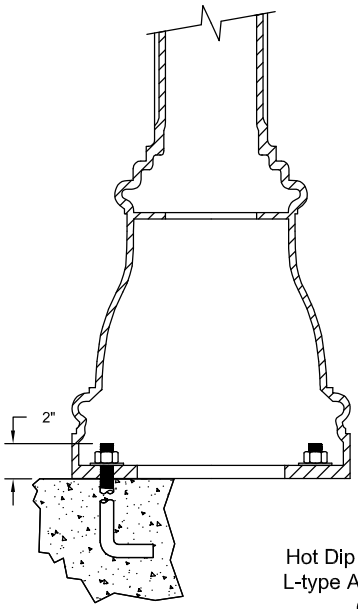


CHA 16"
Ø 3/4"
Hot Dip Galvanized
L-type Anchor Bolts
(4 per Post)

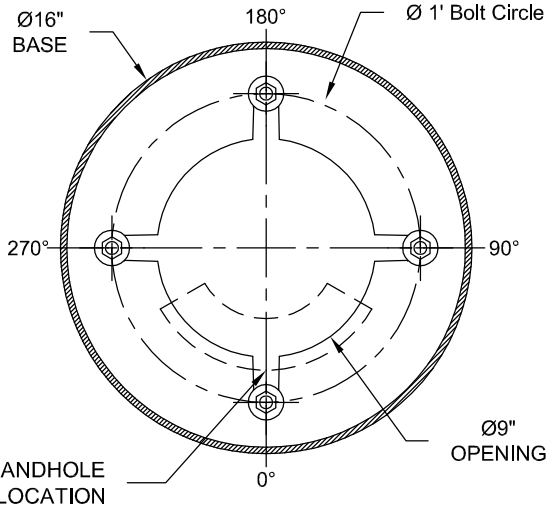


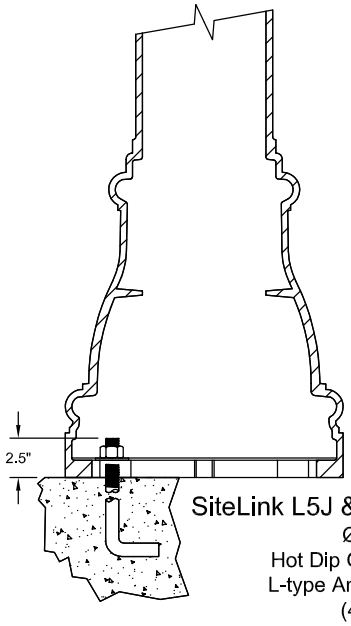


SiteLink L5J & L6J 16"
Ø 3/4" or 1"
Hot Dip Galvanized
L-type Anchor Bolts
(4 per Post)

CHARLESTON™
Aluminum Pole

Architectural
Outdoor

HOLOPHANE®
LEADER IN LIGHTING SOLUTIONS
An AcuityBrandsCompany

© 2010 Acuity Brands Lighting, Inc., All Rights Reserved

THIS DRAWING, WHEN APPROVED, SHALL BECOME THE COMPLETE SPECIFICATION FOR THE MATERIAL TO BE FURNISHED BY HOLOPHANE ON THE ORDER NOTED ABOVE. A UNIT OF SIMILAR DESIGN MAY BE SUPPLIED, BUT ONLY AFTER APPROVAL BY THE CUSTOMER IN WRITING. DO NOT SCALE DRAWING. ALL DIMENSIONS ARE TO BE VERIFIED BEFORE WORK BEGINS. ANY ANCHOR BOLT TEMPLATE THAT WILL BE SUPPLIED WITH CHANGE ANCHOR BOLT TEMPLATE THAT THE POLE PROVIDED. THIS PRINT IS THE PROPERTY OF HOLOPHANE AND IS LOANED SUBJECT TO RETURN UPON DEMAND AND UPON EXPRESS CONDITION THAT IT WILL NOT BE USED DIRECTLY OR INDIRECTLY IN ANY WAY DETRIMENTAL TO OUR INTERESTS, AND ONLY IN CONNECTION WITH MATERIAL FURNISHED BY HOLOPHANE.

| | |
|---|---|
| ORDER #: | |
| TYPE: | |
| DRAWN: | MAB |
| DATE: | 11/14/18 |
| DWG #: | POL_CHA |

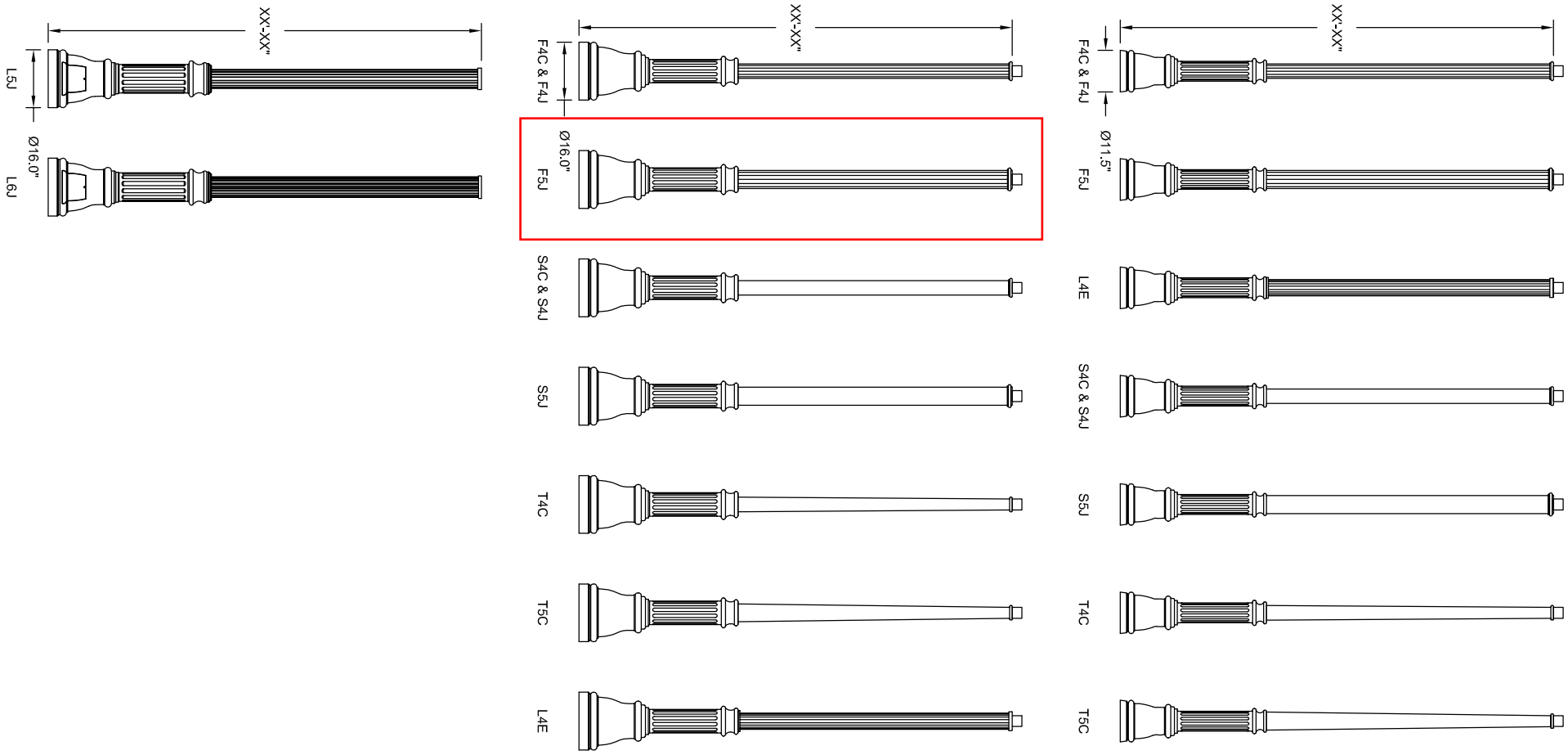


| | |
|---|---|
| ORDER #: | |
| TYPE: | |
| DRAWN: | MAB |
| DATE: | 11/14/18 |
| DWG #: | POL_CHA |

3 of 3

THIS DRAWING, WHEN APPROVED, SHALL BECOME THE COMPLETE SPECIFICATION FOR THE MATERIAL TO BE FURNISHED BY HOLOPHANE ON THE ORDER NOTED ABOVE. A UNIT OF SIMILAR DESIGN MAY BE SUPPLIED, BUT ONLY AFTER APPROVAL BY THE CUSTOMER IN WRITING. ON POLE ORDERS AN ANCHOR BOLT TEMPLATE PRINT WILL BE SUPPLIED WITH EACH ANCHOR BOLT ORDER TO MATCH THE POLE PROVIDED. THIS PRINT IS THE PROPERTY OF HOLOPHANE AND IS LOANED SUBJECT TO RETURN UPON DEMAND AND UPON EXPRESS CONDITION THAT IT WILL NOT BE USED DIRECTLY OR INDIRECTLY IN ANY WAY DETRIMENTAL TO OUR INTERESTS, AND ONLY IN CONNECTION WITH MATERIAL FURNISHED BY HOLOPHANE.

HOLOPHANE®
LEADER IN LIGHTING SOLUTIONS
An AcuityBrandsCompany

© 2010 Acuity Brands Lighting, Inc., All Rights Reserved

Architectural Outdoor

# CHARLESTON™

## Aluminum Pole

# Weatherproof Receptacles

## External, Post Shaft Location

- Ground Fault Circuit Interrupter Receptacles.
- Test/Reset buttons on face of receptacles.
- All Cast Aluminum Covers. Not Plastic. (Paintable to match post color).
- Weatherproof "While in Use" covers in two sizes.

External receptacles are typically installed above pedestrian level for special event uses and docorative seasonal lighting.

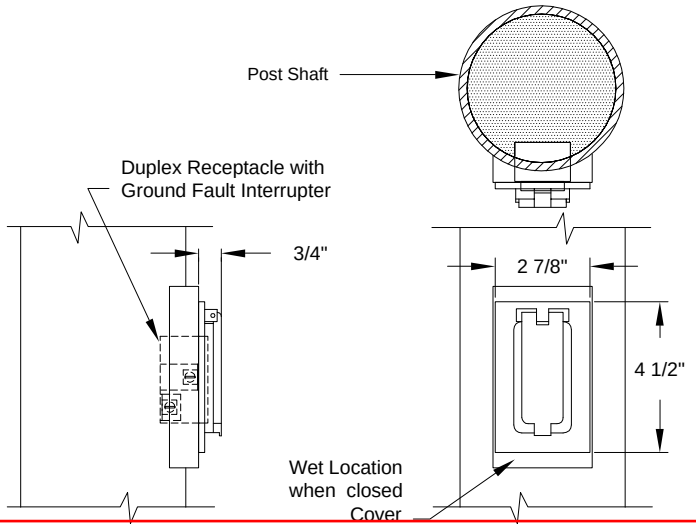


**•Receptacle with Wet Location While Closed Cover**

Catalog part # **FG-SXXH**

**SPECIFICATIONS**

A 20 amp, 125 volt, ground fault circuit interrupter duplex receptacle shall be mounted in the post. The receptacle shall be UL Listed according to E-48380 and UL 943 Class A and UL 498. The receptacle shall have a cast aluminum, UL Listed cover that is suitable for wet locations while not in use. The receptacle and cover shall mount to an outlet opening, in the post shaft, with a gasket and stainless steel screws.

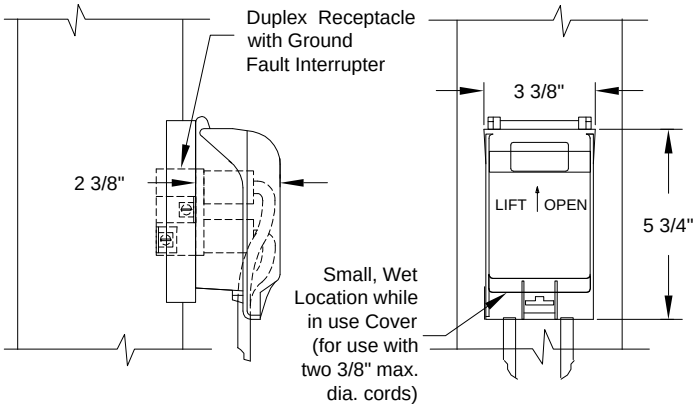


**• Receptacle with Small, In-Use Wet Location Cover**

Catalog part # **FGIUS-SXXH**

**SPECIFICATIONS**

A 20 amp, 125 volt, ground fault circuit interrupter duplex receptacle shall be mounted in the post. The receptacle shall be UL Listed according to E-48380 and UL 943 Class A and UL 498. The receptacle shall have a cast aluminum, lockable, UL Listed cover that is suitable for wet locations while in use and complies with NEC Article 410-57(b). The cover shall accept most common cord sets up to 3/8" diameter (14/3). The receptacle and cover shall mount to an outlet opening, in the post shaft, with a gasket and stainless steel screws.

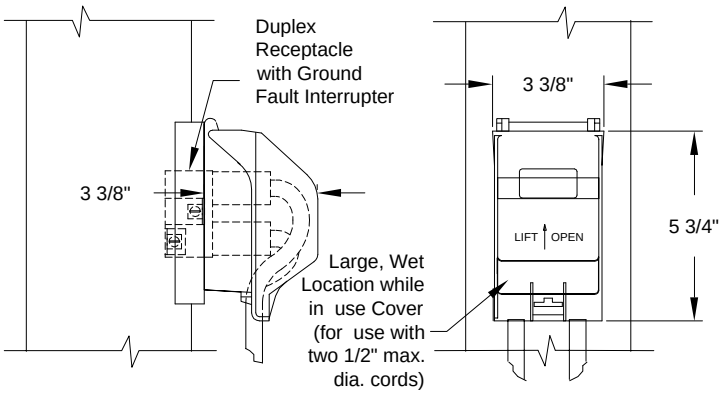


**•Receptacle with Large, In-Use Wet Location Cover**

Catalog part # **FGIUL-SXXH**

**SPECIFICATION**

A 20 amp, 125 volt, ground fault circuit interrupter duplex receptacle shall be mounted in the post. The receptacle shall be UL Listed according to E-8380 and UL 943 Class A and UL 498. The receptacle shall have a cast aluminum, lockable, UL Listed cover that is suitable for wet locations while in use and complies with NEC Article 410-57(b). The cover shall accept most common cord sets up to 1/2" diameter (12/3). The receptacle and cover shall mount to an outlet opening, in the post shaft, with a gasket and stainless steel screws.

For information on specifying orientation and mounting heights see **Orientation Guide** in the back of the Accessories section in the catalog.


HOLOPHANE® An AcuityBrandsCompany
LEADER IN LIGHTING SOLUTIONS 214 OAKWOOD AVENUE - NEWARK, OHIO 43055